SAMSUNG CONFIDENTIAL
THIS DOCUMENT CONTAINS CONFIDENTIAL
AND PROPRIETARY INFORMATION OF
SAMSUNG ELECTRONICS CO'S PROPERTY.
DO NOT DISCLOSE TO OR DUPLICATE FOR OTHERS
EXCEPT AS AUTHORIZED BY SAMSUNG.

SM-A600GN REV0.0

2018.03.16

sheet01 : GSM / WCDMA / LTE RF

sheet02 : TRANCEIVER, DRX

sheet03 : GPS, BT/WIFI, NFC, FM

sheet03 : JOSHUA

sheet05 : PMIC(Main,IF), eMMC, IF Conn, KEY, MOTOR

sheet06 : Audio, SD/SIM, BTP

sheet07 : CAMERA, DISPLAY, SHEILD CAN

Samsung Confidential

SAMSUNG CONFIDENTIAL
THIS DOCUMENT CONTAINS SAMSUNG ELECTRONICS PROPRIETARY INFORMATION THAT IS SAMSUNG ELECTRONICS CO'S PROPERTY. DO NOT DISCLOSE THIS DOCUMENT TO ANY THIRD PARTY WITHOUT SUCH AS AUTHORIZED BY SAMSUNG.

RF PART 1

LOWER_ANT

3712-001763 (CS-113A)

Mid/High Band

3301-001778

Low Band

Metal Mask

Mid/High Band Ant. SW

MAIN CA FEMID

F/FN NC

HB SP4T

P_DET SP4T

Grip Sensing Path

GND CONTACT

APT MODULATOR

B28 DPX / B29 RX SAW

B13 DPX

CCP

Samsung Confidential

Engineer	RF
Model	SM-A530N
Date	
Rev	
Page	1

SAMSUNG CONFIDENTIAL
THIS DOCUMENT CONTAINS SAMSUNG ELECTRONICS PROPRIETARY INFORMATION THAT IS SAMSUNG ELECTRONICS CO'S PROPERTY. DO NOT DISCLOSE THIS DOCUMENT TO ANY THIRD PARTY EXCEPT AS AUTHORIZED BY SAMSUNG.

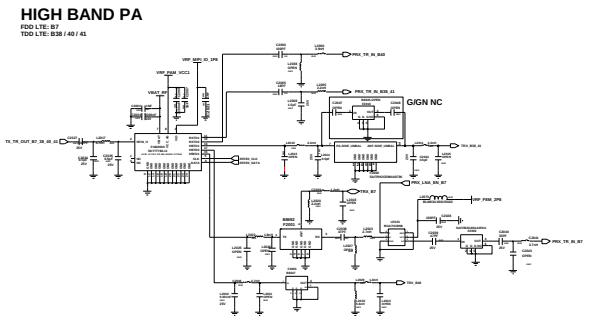

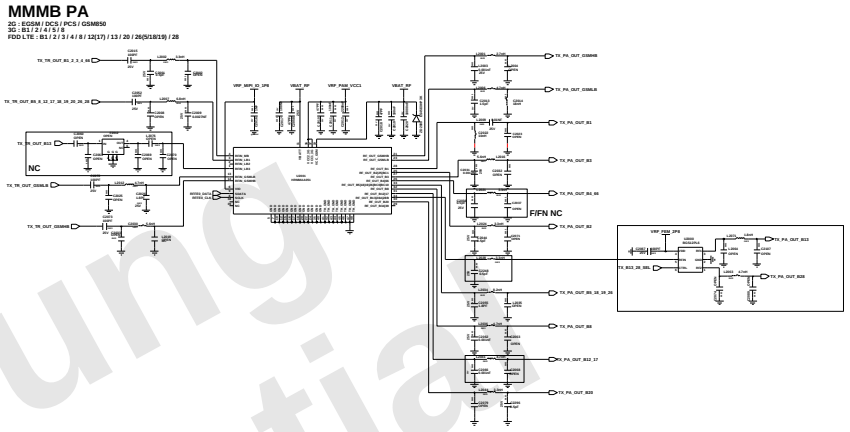

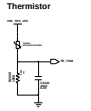

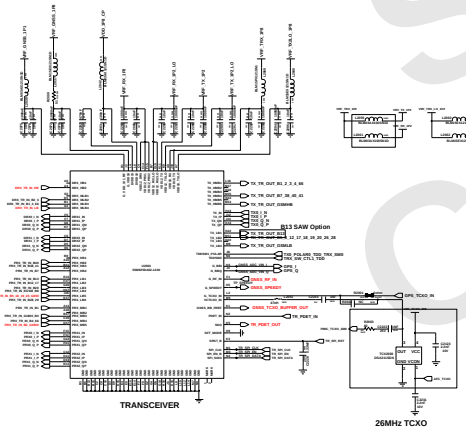

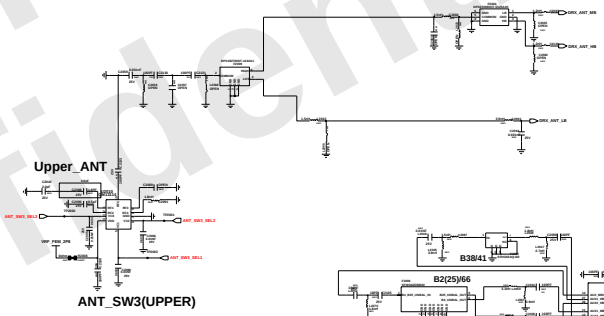

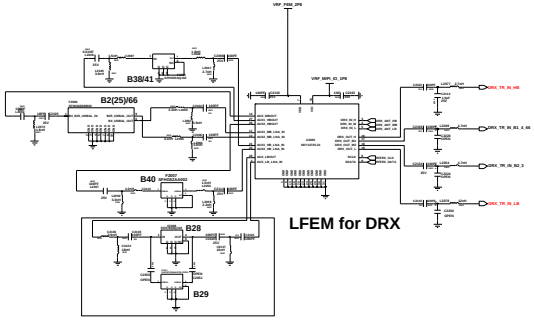

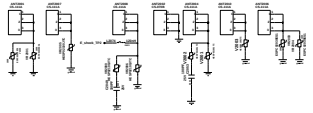

Samsung Confidential

Engineer	RF
Model	SM-A530N
Date	
Rev.	

SAMSUNG CONFIDENTIAL
THIS DOCUMENT CONTAINS CONFIDENTIAL
AND PROPRIETARY INFORMATION OF
SAMSUNG ELECTRONICS CO'S PROPERTY.
DO NOT DISCLOSE TO OR DUPLICATE FOR OTHERS
EXCEPT AS AUTHORIZED BY SAMSUNG.

Connectivity

GPS

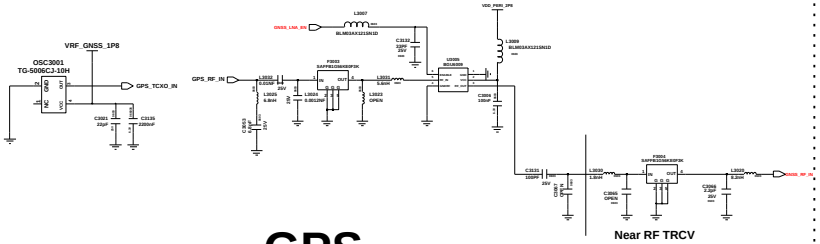

BT/WIFI

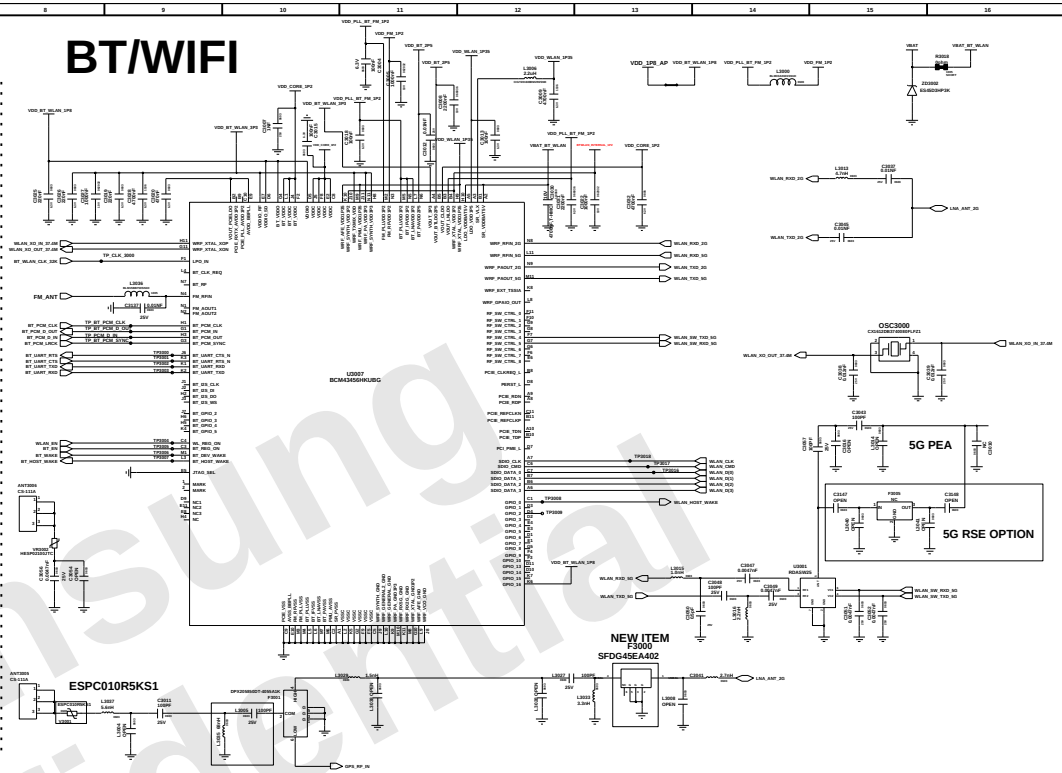

NFC

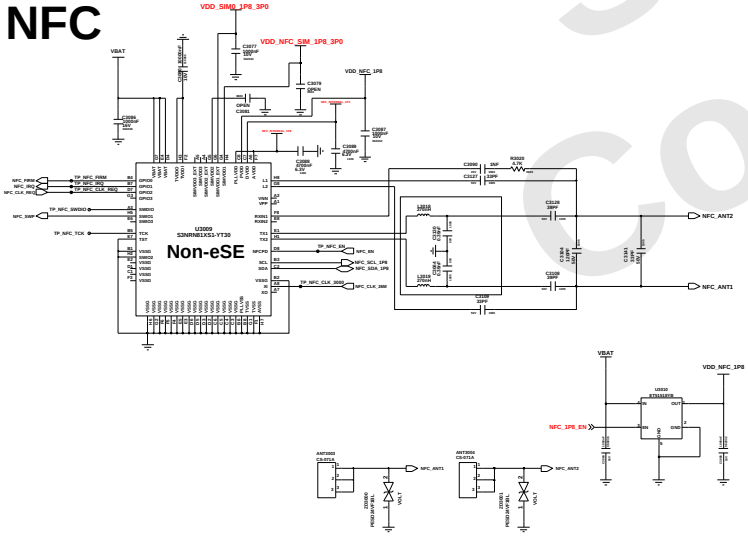

TDMB (@KOR) NC

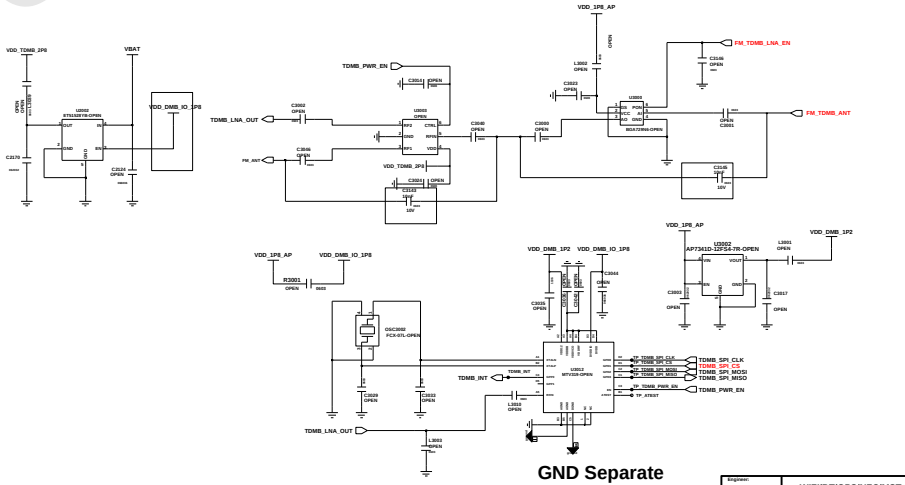

Engineer:	WIFI/BT/GPS/NFC/MST
Design by:	
RED CHK:	SIZE: A1
DOC CTRL CHK:	
MFG ENGR CHK:	
QA CHK:	REV: / Drawing Number: / Page: 1

Changed by: / Date Changed: / Time Changed:

Samsung Confidential

SAMSUNG PROPRIETARY
THIS DOCUMENT CONTAINS CONFIDENTIAL PROPRIETARY INFORMATION THAT IS SAMSUNG ELECTRONICS CO'S PROPERTY. DO NOT DISCLOSE TO OR DUPLICATE FOR OTHERS EXCEPT AS AUTHORIZED BY SAMSUNG.

VER. CHECK

REV	HW_VER0	HW_VER1	HW_VER2	HW_VER3
Bup 0.0	0	0	0	0
REV 0.1	0	0	0	1
REV 0.2	0	0	1	0
REV 0.3	0	0	1	1
REV 0.4	0	1	0	0

UCP400-1
S5E7870XH0-LA30

POP : Micron 3GB LP3

UCP400-2
S5E7870XH0-LA30

I2C PULL UP

AP JTAG

Samsung Confidential

SAMSUNG CONFIDENTIAL
THIS DOCUMENT CONTAINS SAMSUNG ELECTRONICS PROPRIETARY INFORMATION THAT IS SAMSUNG ELECTRONICS CO'S PROPERTY. DISCLOSURE TO THIRD PARTIES OR ANY USE WITHOUT SUCH RIGHTS IS SUBJECT TO AUTHORIZED BY SAMSUNG.

POWER

PMIC

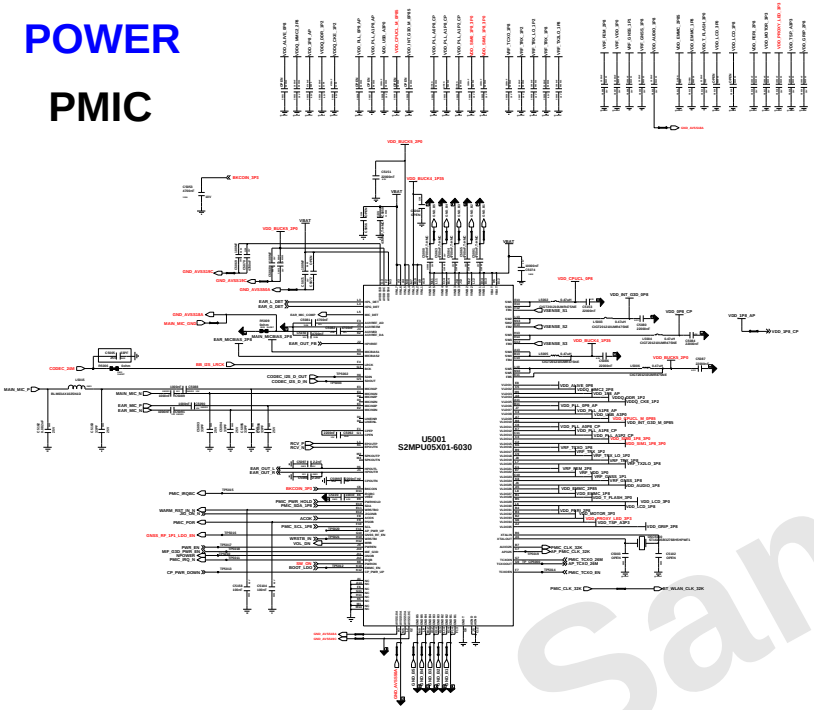

IF PMIC EVT4(CHG+FG+BUCK)

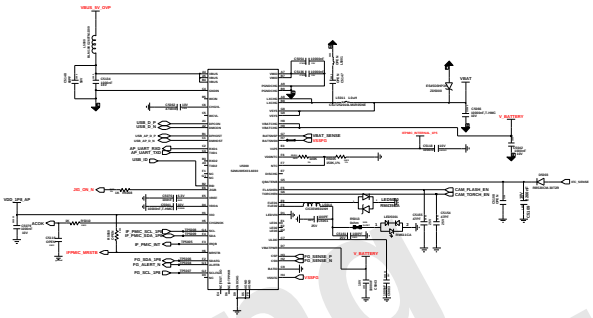

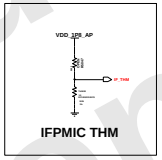

IFPMIC THM

eMMC 32GB 5.1

1st : SEC (1107-002552)

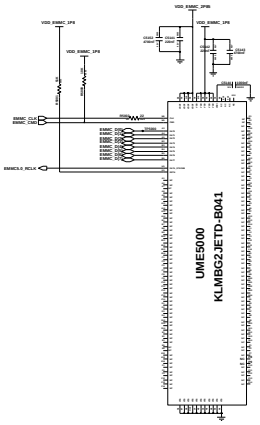

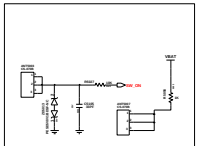

POWER KEY

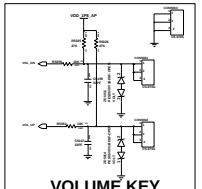

VOLUME KEY

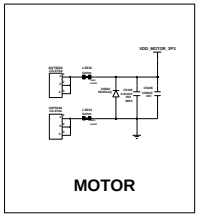

MOTOR

	RS012	RS011
NFC	OPEN	SHORT
Non NFC	SHORT	OPEN

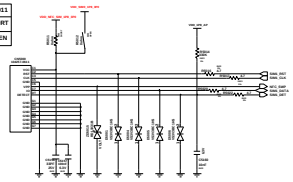

SIM1 SOCKET

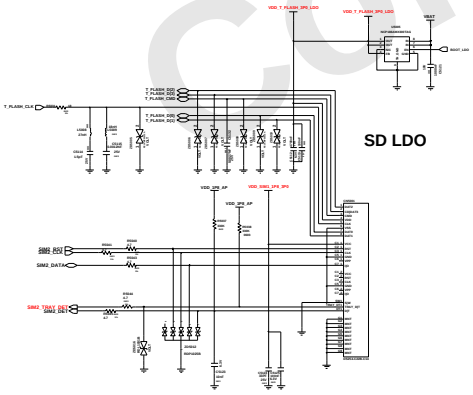

SD LDO

SIM2 & SD HYBRID SOCKET

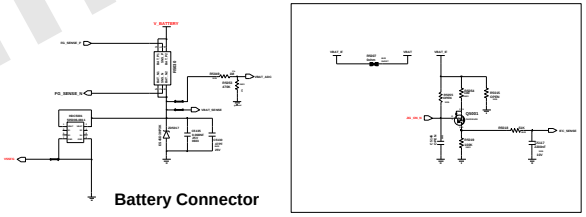

Battery Connector

REV04

BATTERY CON GASKET

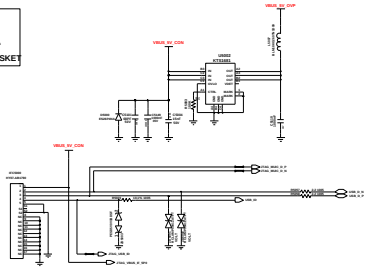

USB Connector

Samsung Confidential

SAMSUNG CONFIDENTIAL
THIS DOCUMENT CONTAINS CONFIDENTIAL
AND PROPRIETARY INFORMATION OF
SAMSUNG ELECTRONICS CO'S PROPERTY.
DO NOT DISCLOSE TO OR DUPLICATE FOR OTHERS
EXCEPT AS AUTHORIZED BY SAMSUNG.

AUDIO

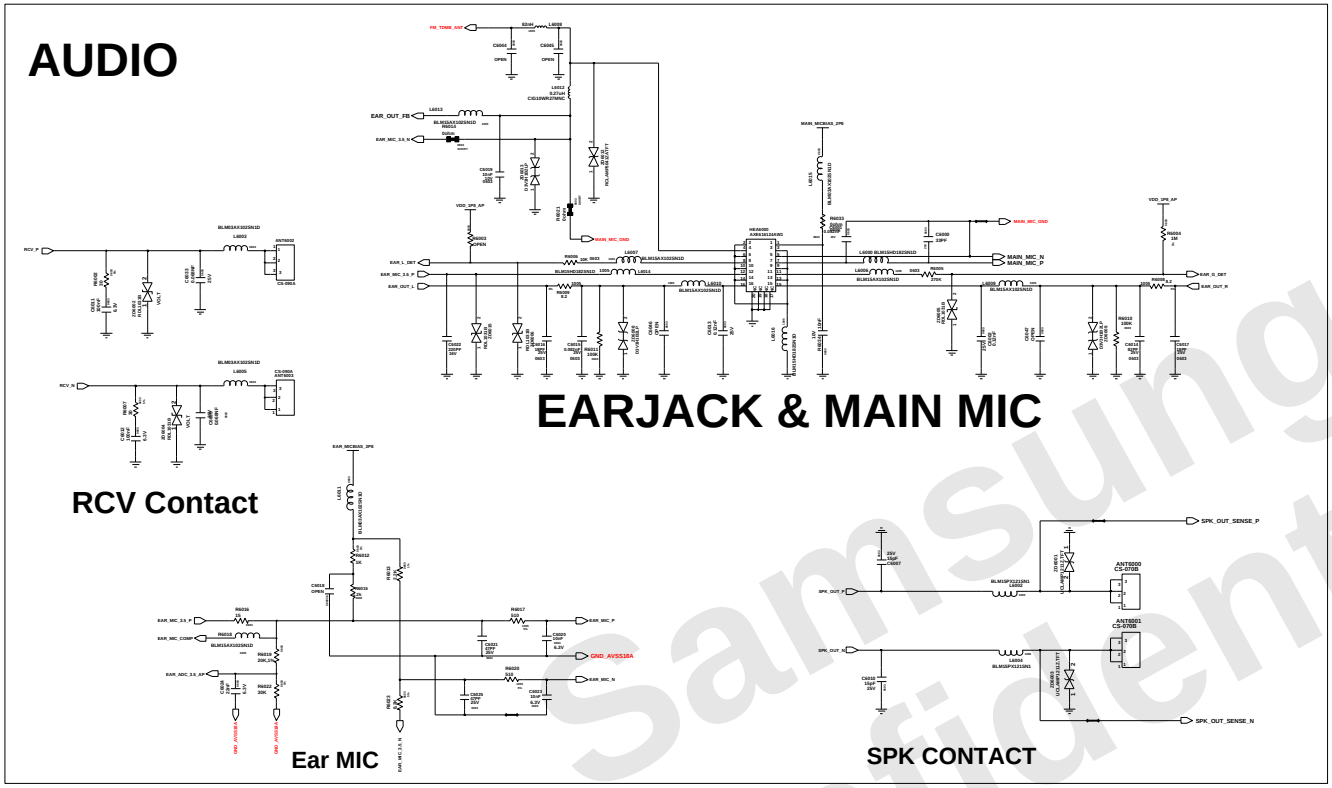

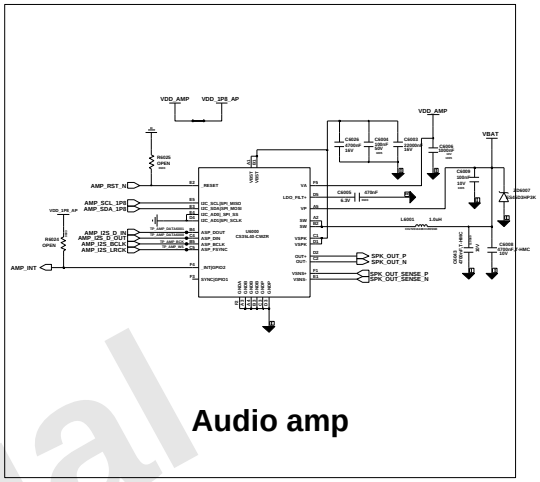

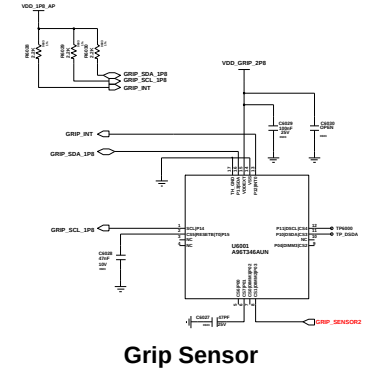

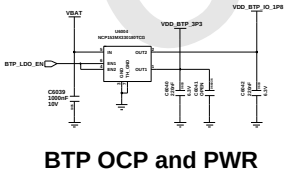

BTP

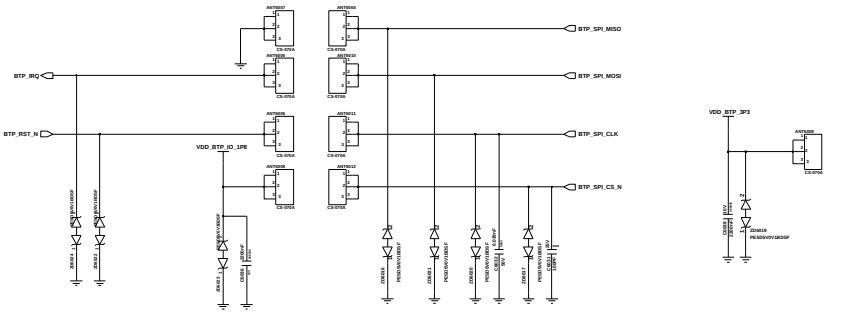

Samsung Confidential

Engineer:	AUDIO, SUB PCB CON.
Screen Sgn:	
R&D CHK:	TITLE:
DOC CTRL CHK:	
MFG ENGR CHK:	
QA CHK:	REV: / Drawing Number: / Page:

SAMSUNG CONFIDENTIAL
THIS DOCUMENT CONTAINS CONFIDENTIAL
AND PROPRIETARY INFORMATION OF
SAMSUNG ELECTRONICS CO'S PROPERTY.
DO NOT DISCLOSE TO OR DUPLICATE FOR OTHERS
EXCEPT AS AUTHORIZED BY SAMSUNG.

CAMERA

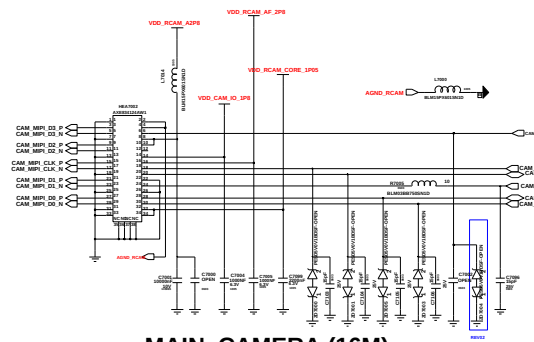

MAIN_CAMERA (16M)

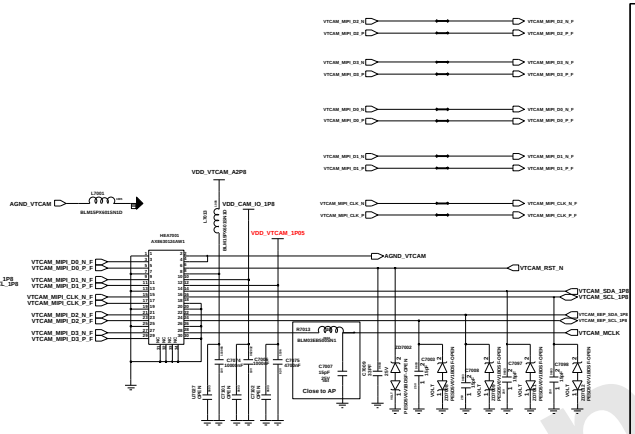

FRONT_CAMERA (16M)

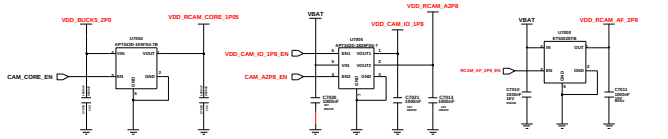

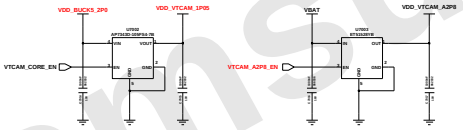

SHIELD CAN

WIFI

APT

	F (MEA)	FN (KUR,CIS)	G (SEA, SWA)	GN (LA)		
R7000	Solder					
R7001		Solder				
R7002			Solder			
R7003				Solder		

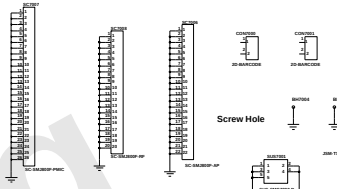

PCB JTAG

Screw Hole

	3/32	4/32	4/64	
R7014	Solder			
R7015		Solder		
R7016			Solder	

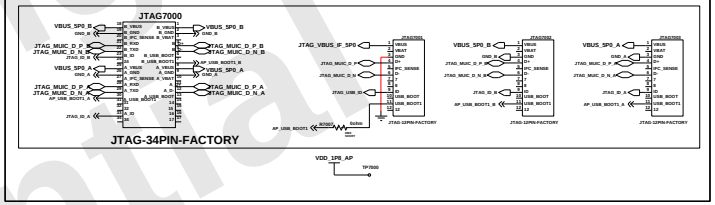

JTAG-34PIN-FACTORY

DISPLAY

(5.2" HD OCTA)

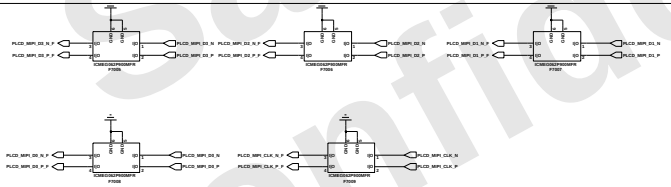

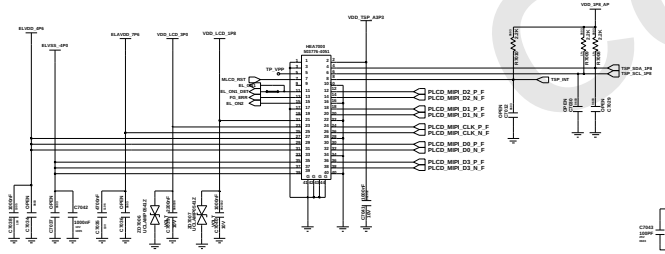

OCTA CONNECTOR

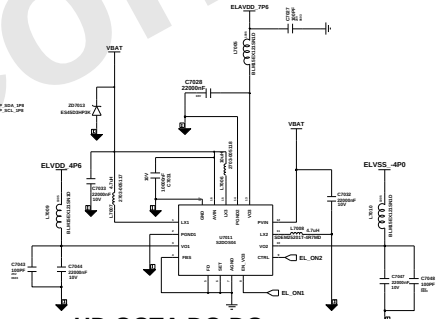

HD OCTA DC-DC

SENSOR

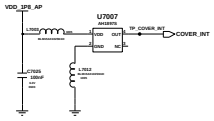

FLIP Cover Detect

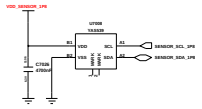

Magnetic Sensor

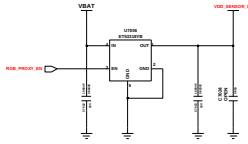

SENSOR LDO

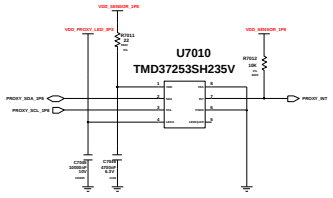

Proxy&RGB Sensor(ONE HOLE)

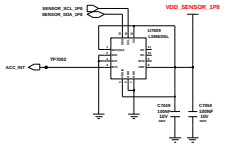

Accel&GYRO Sensor

Engineer:	CAMERA, DISPLAY
Design by:	
R&D CHK:	TITLE:
DOC CTRL CHK:	
MFG ENGR CHK:	
QA CHK:	

Changed by:	Date Changed:	Time Changed:	REV:	Drawing Number:	Page:

Samsung Confidential

Model : SM-A600GN
Revision : 0.0
Manufacture Count : 330
Charge : 정채수
Contact : 01086243463
Date : 18.03.22
Routing : O
Resin : O

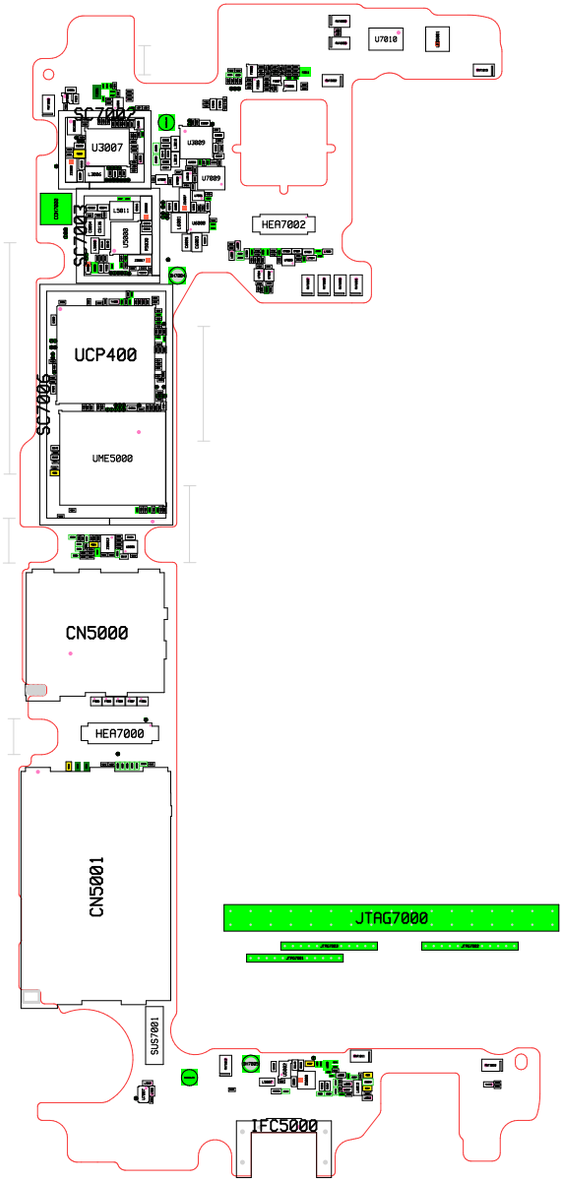
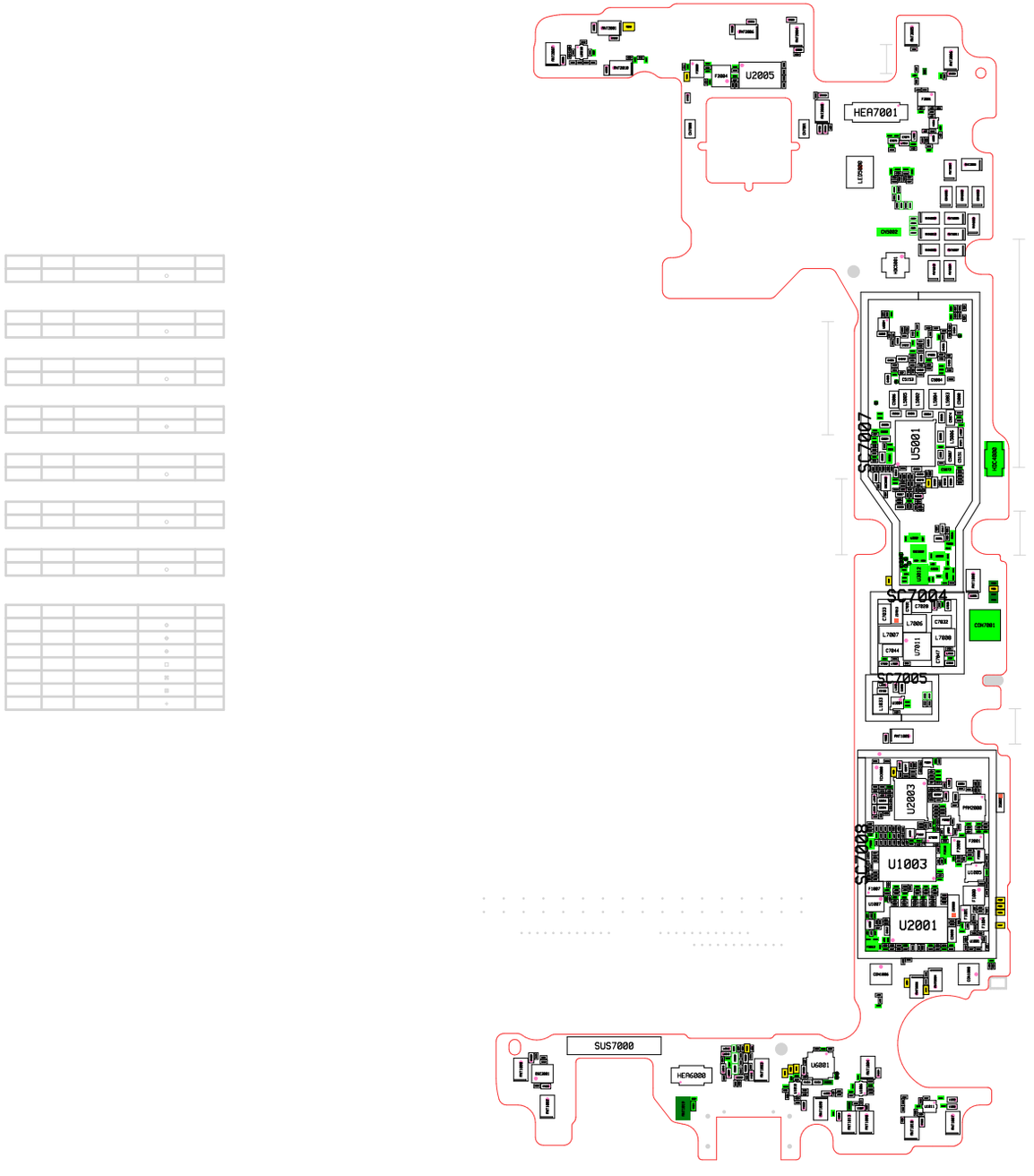
Model : SM-A600GN
Revision : 0.0
Manufacture Count : 330
Charge : 정채수
Contact : 01086243463
Date : 18.03.22
Routing : O
Resin : O